Rev.	ECN Number	Description	Drawn
2	CH11040153	Correct Written Fault	Kevin_04/22'11
3	EH12010047	Change Tolerance	Kevin_01/17'12

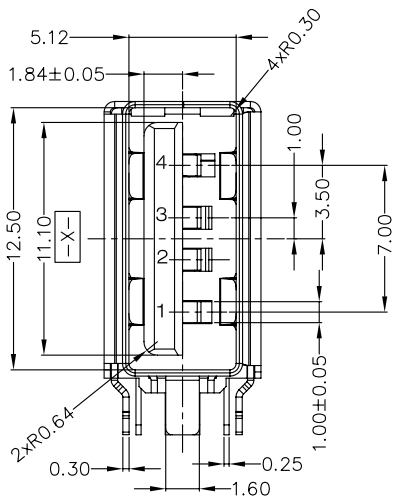

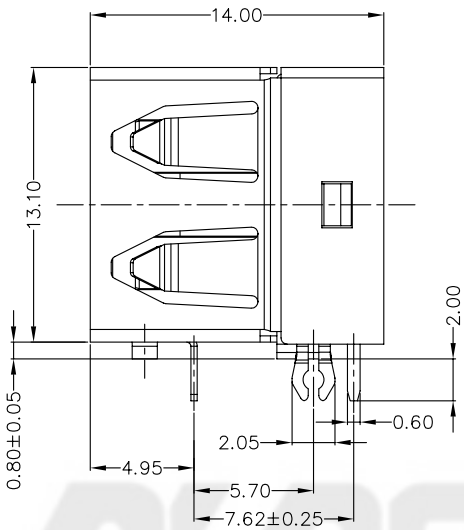

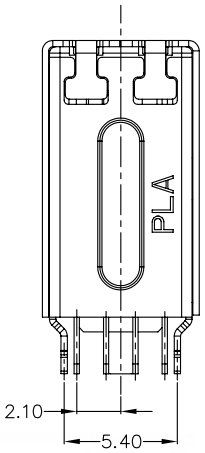

NOTES: (UNLESS OTHERWISE SPECIFIED)

1. DIMENSION SHALL BE INTERPRETED PER ANSI Y14.5M-1994
2. FEATURES:
   HOUSING: LCP UL94VO Cool gary 1
   CONTACT: PHOSPHOR BRONZE C5191R-H, T=0.25mm, GOLD PLATED ON CONTACT AREA, 100-200u"TIN (LEAD FREE) ON SOLDER AREA, 50-100u" NICKEL UNDERPLATED.
   SHELL: FRONT SHELL: PHOSPHOR BRONZE C5191R-H, T=0.30mm, 100u"MIN BRIGHT NICKEL PLATING OVER ALL, NICKEL MUST BE SOLDRABILITY.
   BACK SHELL: PHOSPHOR BRONZE C5191R-H, T=0.30mm, 100u"MIN BRIGHT NICKEL PLATING OVER ALL, NICKEL MUST BE SOLDRABILITY.
3. TOTAL MATING FORCE: 35N Max.
4. TOTAL UNMATING FORCE: Initial to 3000 cycles: 10N min.
5. DURABILITY: 3000 MATING CYCLES Min.
6. RATED VOLTAGE: 30V DC.
7. CURRENT RATING: 3 AMPERE.
8. CONTACT RESISTANCE: 30 m ohms MAX. FOR INITIAL.
9. DIELECTRIC WITHSTANDING VOLTAGE: 500V AC/MINUTE.
10. INSULATION RESISTANCE: 1000 Megohms MIN..
11. TEMPERATURE RANGE: 0°~50°
12. HARMFUL MATERIAL SHOULD BE COMPLIANT TO DOC. "EI-0005" STANDARDS.
13. PRODUCT NUMBER MATRIX: KA04-048-04-*

CONTACT PLATING CODE:
1: GOLD FLASH PLATED.
3: 5u"GOLD PLATED.
4: 10u"GOLD PLATED.
5: 15u"GOLD PLATED.
8: 30u"GOLD PLATED.

NULL: WITH HALOGEN
H: HALOGEN FREE

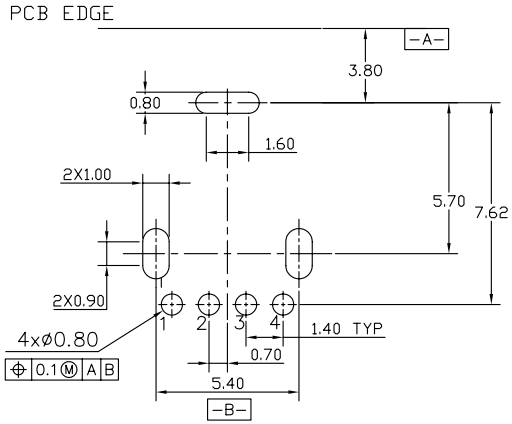

Recommended PCB Layout
(PCB TOLERANCE ±0.05)

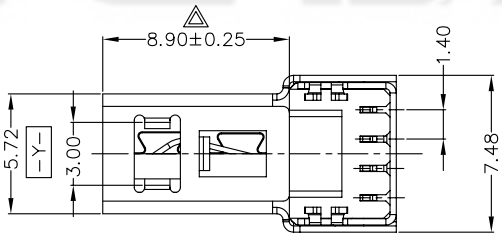

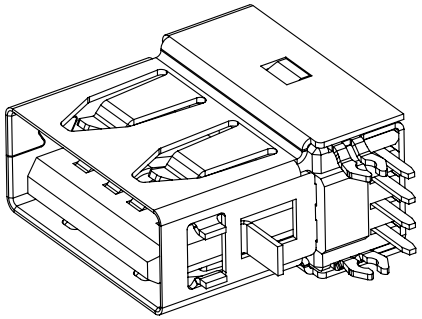

PLASTRON TECHNOLOGY (SHEN ZHEN) CO., LTD.	GENERAL TOLERANCE		SCALE 1:1	ORIGINAL DRAWN Kevin	DATE 03/21'11	DWG. NO. 600-0000-1003	TITLE CUSTOMER DRAWING 4PIN USB CONNECTOR SERIES	REV. 3
	XX. ±	XXX. ±	UNIT MM	CHECK Lane Sun	DATE 04/22'11	PARTS NO.(INTENDED USE) KA04-04*-04-*		SHEET 1/2
	X. ± 0.30	.XXX ±						
	.X ± 0.25	X.° ± 3°	SIZE A4	APPROVE Liss Xiang	DATE 04/22'11			
	.XX ± 0.20	.X° ± 2°						